THE GLEAM MACHINE

- *The GLEAM MACHINE has two side 53" brushes mounted at a special angle and a top brush with*
. special drying cloth
- The GLEAM MACHINE is placed after dryers to effectively remove the small water droplets left on *the windows. It gently buffs the hood and horizontal surfaces, along with the vertical surfaces above the fender well.*
- *Most operators are using the GLEAM MACHINE as an option in their higher priced packages.*
- *The GLEAM MACHINE will work with your blowers to produce a dryer vehicle.*
- *Pneumatic Retracts are included.*
- *Hydraulic flow controls and solenoid valves are included in proportionator pricing or purchased separately*
- GLEAM MACHINE *requires 4 computer functions*
- *Mounted on a 42" deep Stainless Steel Frame that is 126" tall.*
- *Tunnel space requirements of 13'-0"*
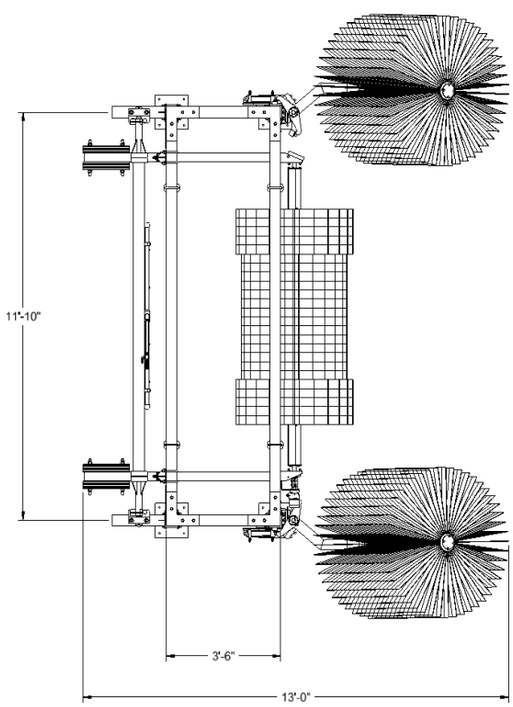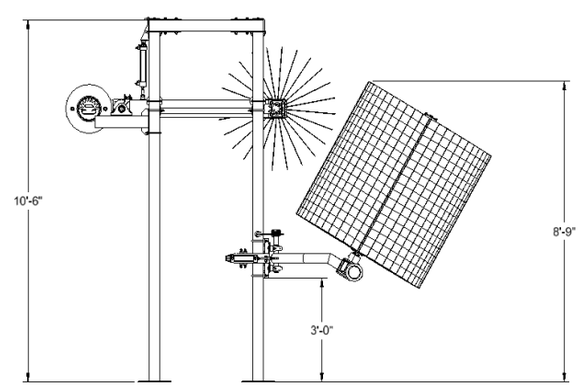
H426892	**Gleam Machine with Stainless Steel Frame**	**$42,460.00**
H368529	**Upgrade Drying Material to removable flags for easy cleaning for Top Brush**	**$800.00**
H370352	**Upgrade Drying Material to removable flags for easy cleaning for both side Brushes**	**$1,120.00**
H368528	**Complete set of Drytex Drying Material removable flags for Top Brush**	**$2,025.00**
H368436	**Top Brush Auto-Retract Controls**	**$4,715.00**
H426801	**Upgrade a set of brushes to Electric Motor**	**$2,590.00**
H426802	**Upgrade Top Brush to electric motor**	**$1,305.00**
H816322	**VFD control panel includes 2 VFD's for 3-1 hp motors**	**$5,390.00**
H817826	**LED 72 W light to illuminate the foam available in different colors see page 4**	**$415.00**
H817827	**LED 144 W light to illuminate the foam available in different colors see page 4**	**$650.00**